KOGANEI
International America, Inc.

Electric Hand Flat Type

EW2H Series

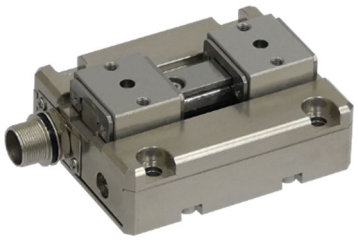

WORLD THINNEST BODY
Light weight, compact design

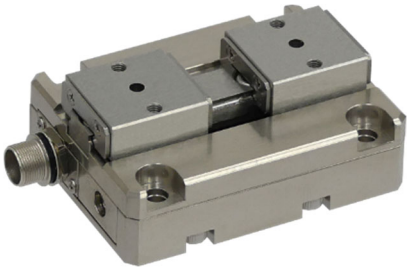

3 SIZE AVAILABLE
Max gripping force: 8N, 18N, 28N

2 CONTROLLER AVAILABLE
Point input type, CC-link type

Combination with Auto Hand Changer

RoHS compliant product

Specifications

Basic Specifications of the Main Unit

● Standard stroke type

Specification / Model			EW2H8	EW2H18	EW2H28
Motor			Brushless motor		
Maximum Speed (per side during positioning mode)		mm/s [in./sec.]	50 [1,97]		
Maximum Speed (per side during pickup mode) Note		mm/s [in./sec.]	20 [0.79]	30 [1.18]	20[0.79]
Minimum speed (per side)		mm/s [in./sec.]	5 [0.20]		
Maximum Gripping Force Note		N [lbf.]	8～16 [1.8～3.6]	18～33 [4.0～7.4]	28～50 [6.3～11.2]
Operating Temperature Range		°C [°F]	0 to 40 [32~104]		
Open/Close Stroke		mm [in.]	10 [0.39] (One side 5 [0.195])	14 [0.55] (One side 7 [0.275])	18 [0.71] (One side 9 [0.355])
Continuous Positioning Accuracy		mm [in.]	±0.05 [±0.0020]		
Allowed Moment of Inertia (dynamic)	Mp	[in·lbf]	0.05 [0.44]	0.1 [0.89]	0.3 [2.66]
	My	[in·lbf]	0.03 [0.27]	0.1 0.89]	0.4 [3.54]
	Mr	[in·lbf]	0.06 [0.53]	0.2 [1.77]	0.8 [7.08]
Maximum Payload Capacity (one side)		[lbf]	0.2 (0.1) [0.44 (0.22)]	0.3 (0.15) [0.66 (0.33)]	0.4 (0.2)[0.88 (0.44)]
Weight		[lbf]	0.09 [0.20]	0.16 [0.35]	0.36 [0.79]
Compatible Controllers			**EW2C-H-NP and EW2C-H-PN and EW2C-H-CC**		

● Long stroke type

Specification / Model			EW2HL8	EW2HL18	EW2HL28
Motor			Brushless motor		
Maximum Speed (per side during positioning mode)		mm/s [in./sec.]	50 [1,97]		
Maximum Speed (per side during pickup mode) Note		mm/s [in./sec.]	20 [0.79]	30 [1.18]	20[0.79]
Minimum speed (per side)		mm/s [in./sec.]	5 [0.20]		
Maximum Gripping Force Note		N [lbf.]	8～16 [1.8～3.6]	18～33 [4.0～7.4]	28～50 [6.3～11.2]
Operating Temperature Range		°C [°F]	0 to 40 [32~104]		
Open/Close Stroke		mm [in.]	32 [1.26] (One side 16 [0.63])	42 [1.65] (One side 21 [0.83])	52 [2.05] (One side 26 [1.02])
Continuous Positioning Accuracy		mm [in.]	±0.05 [±0.0020]		
Allowed Moment of Inertia (dynamic)	Mp	[in·lbf]	0.05 [0.44]	0.1 [0.89]	0.3 [2.66]
	My	[in·lbf]	0.03 [0.27]	0.1 0.89]	0.4 [3.54]
	Mr	[in·lbf]	0.06 [0.53]	0.2 [1.77]	0.8 [7.08]
Maximum Payload Capacity (both sides)		[lbf]	0.2 (0.1) [0.44 (0.22)]	0.3 (0.15) [0.66 (0.33)]	0.4 (0.2)[0.88 (0.44)]
Weight		[lbf]	0.14 [0.31]	0.25 [0.55]	0.48 [1.06]
Compatible Controllers			**EW2C-H-NP and EW2C-H-PN and EW2C-H-CC**		

Note: Refer to the graph on page 50 for more information on gripping force and gripping speed.

Basic Specifications of the Controller

●Point Input Controller (NPN specification)

Specification / Model		EW2C-H-NP
Control Specifications	Motor Drive System	Pulse drive
	Control Method	Closed-loop control Note
	Operational Method	PTP, force control
	Home Position Detection Method	End of stroke detection
	Position Detection Method	Hall IC output
	Minimum Configurable Distance	0.05 mm [0.0020 in]
	Point Configuration	32 points
	Point Input Method	Numerical value input, teaching input, and direct teaching
	Point Configuration Input	5 inputs
	Control Input	3 inputs - ORG, START, and STOP
	Control Output	4 outputs - READY, BUSY, HOLD, and INPOS
	Error Detection Output	Overload, disconnections, data errors, and system errors
	Motor Drive Cable	Specialized motor drive output and Hall IC input cable (shielded F.G)
	Hall IC Cable	
RS485 Communication Protocol	External Communication	RS485, 1 ch (PC/teaching box communication) Supports daisy chain connections (up to a maximum of 16 daisy-chained devices)
	Communication Protocol	Half-duplex
	Synchronization Method	Start-stop synchronization method
	Communication Speed	115.2 kbps
	Parity Bit	Odd [0.045 lb.]
	Network Length	Total cable length of no more than 100 m
	Communication Cable	Network cable (2-pair twisted pair cable)
General Specifications	Weight	0.2 kg
	Power Supply	24 VDC±10% 1.6 A MAX (common power supply that includes RS485 communication)
	Power Indicator	PWR
	Operating Temperature Range	0 to 40 °C [32～104°F]
	Operating Humidity Range	35 to 85% RH (no condensation)
	Storage Temperature Range	-10 to 65°C [14～149°F]
	Backup	Settings and conditions are stored in EEPROM
	Noise Tolerance	IEC61000-4-4 Level 3
	Accessories	I/O cable and power cable

(Note) Detection of step out by Hall IC is performed.

●Point Input Controller (PNP specification)

Specification \ Model		EW2C-H-PN
Control Specifications	Motor Drive System	Pulse drive
	Control Method	Closed-loop control Note
	Operational Method	PTP, force control
	Home Position Detection Method	End of stroke detection
	Position Detection Method	Hall IC output
	Minimum Configurable Distance	0.05 mm [0.0020 in]
	Point Configuration	32 points
	Point Input Method	Numerical value input, teaching input, and direct teaching
	Point Configuration Input	5 inputs
	Control Input	3 inputs - ORG, START, and STOP
	Control Output	4 outputs - READY, BUSY, HOLD, and INPOS
	Error Detection Output	Overload, disconnections, data errors, and system errors
	Motor Drive Cable	Specialized motor drive output and Hall IC input cable (shielded F.G)
	Hall IC Cable	
RS485 Communication Protocol	External Communication	RS485, 1 ch (PC/teaching box communication) Supports daisy chain connections (up to a maximum of 16 daisy-chained devices)
	Communication Protocol	Half-duplex
	Synchronization Method	Start-stop synchronization method
	Communication Speed	115.2 kbps
	Parity Bit	Odd [0.045 lb.]
	Network Length	Total cable length of no more than 100 m
	Communication Cable	Network cable (2-pair twisted pair cable)
General Specifications	Weight	0.2 kg
	Power Supply	24 VDC±10% 1.6 A MAX (common power supply that includes RS485 communication)
	Power Indicator	PWR
	Operating Temperature Range	0 to 40 °C [32～104°F]
	Operating Humidity Range	35 to 85% RH (no condensation)
	Storage Temperature Range	-10 to 65°C [14～149°F]
	Backup	Settings and conditions are stored in EEPROM
	Noise Tolerance	IEC61000-4-4 Level 3
	Accessories	I/O cable and power cable

(Note) Detection of step out by Hall IC is performed.

●CC-Link Controllers

Specification / Model		EW2C-H-CC
Control Specifications	Motor Drive System	Pulse drive
	Control Method	Closed-loop control
	Operational Method	PTP, force control
	Home Position Detection Method	End of stroke detection
	Position Detection Method	Hall IC output
	Minimum Configurable Distance	0.05 mm [0.0020 in]
	Point Configuration	32 points
	Point Input Method	Numerical value input, teaching input, and direct teaching
	Point Configuration Input	5 inputs
	Control Input	3 inputs - ORG, START, and STOP
	Control Output	4 outputs - READY, BUSY, HOLD, and INPOS
	Error Detection Output	Overload, disconnections, data errors, and system errors
	Motor Drive Cable	Specialized motor drive output and Hall IC input cable (shielded F.G)
	Hall IC Cable	
RS485 Communication Protocol	External Communication	RS485 1 ch (PC/teaching box communication) Supports daisy chain connections (up to a maximum of 16 daisy-chained devices)
	Communication Protocol	Half-duplex
	Synchronization Method	Start-stop synchronization method
	Communication Speed	115.2 kbps
	Parity Bit	Odd
	Network Length	Total cable length of no more than 100 m
	Communication Cable	Network cable (2-pair twisted pair cable)
General Specifications	Weight	0.2 kg [0.045 lb.]
	Power Supply	24 VDC±10% 1.6 A MAX (common power supply that includes CC-Link and RS485 communication)
	Power Indicator	PWR
	Operating Temperature Range	0 to 40 °C [32～104°F]
	Operating Humidity Range	35 to 85% RH (no condensation)
	Storage Temperature Range	-10 to 65°C [14～149°F]
	Backup	Settings and conditions are stored in EEPROM
	Noise Tolerance	IEC61000-4-4 Level 3
	Accessories	CC-Link connector and power cable
CC-Link Communication Specifications	Version	Ver. 1.10
	Communication Protocol	Broadcast polling
	Synchronization Method	Frame synchronization
	Topology	Bus (EIA RS485-compliant)
	Communication Speed	156 kbps, 625 kbps, 2.5 Mbps, 5 Mbps, and 10 Mbps - Rotary switch used to select the speed
	Number of Nodes	1 remote I/O node
	Node Configuration	1 - 64, Rotary switches used to select number
	CLEAR/HOLD	DIP switch used for selection CLEAR: Clears all data other than the controller connection setting when CC-Link errors occur HOLD: Retains the previous state when CC-Link communication errors occur
	Indicators	PW, L RUN, SD, RD, L ERR (LED: Red)
	Maximum Network Distance	

Communication speed bps	156 k	625 k	2.5 M	5 M	10 M
Maximum leught of cable m[ft]	1200 [3937]	900 [2953]	400 [1312]	160 [525]	100 [328]

Communication Cable	Ver. 1.10 CC-Link cable
Terminating Resistor	110 Ω when using Ver 1.10 CC-Link cable

Outline Drawings

Main Unit

EW2H8

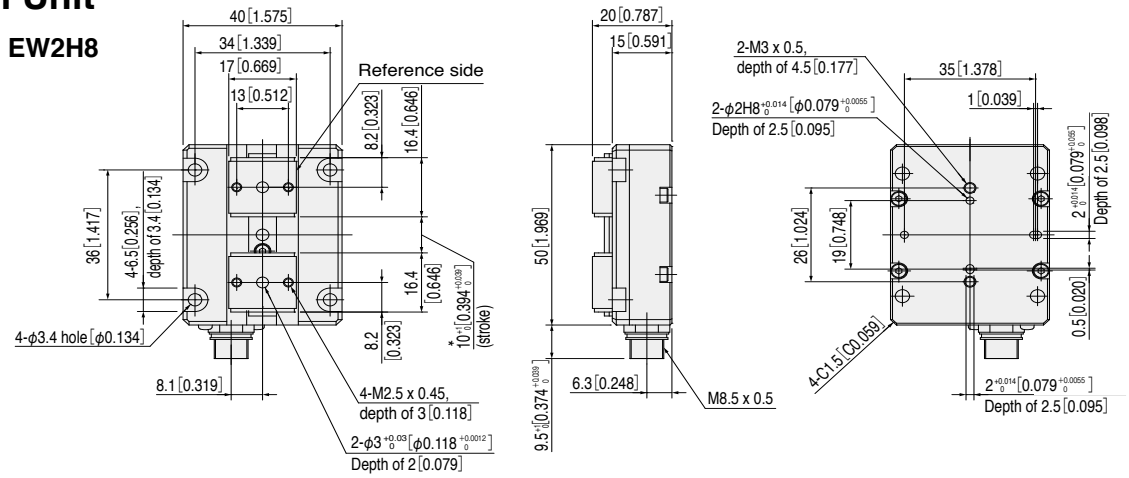

*It shows the dimension in case that home position is located at open-side. If you need the adjustment of home position, please change the parameter of home position shift.

Cable direction: for 1, 2, and 3

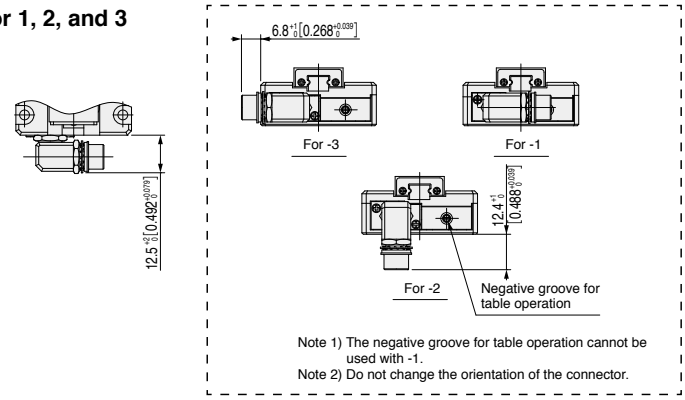

EW2H18

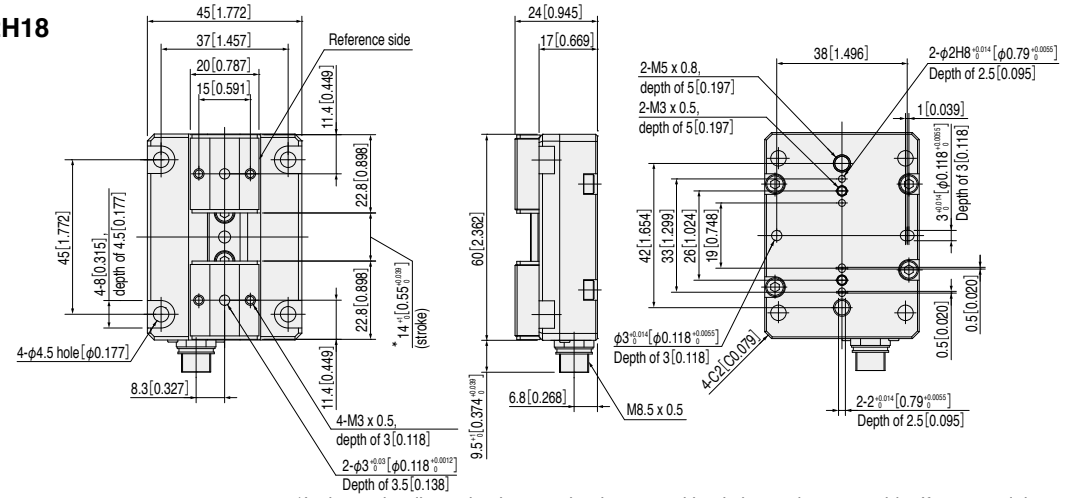

*It shows the dimension in case that home position is located at open-side. If you need the adjustment of home position, please change the parameter of home position shift.

Cable direction: for 1, 2, and 3

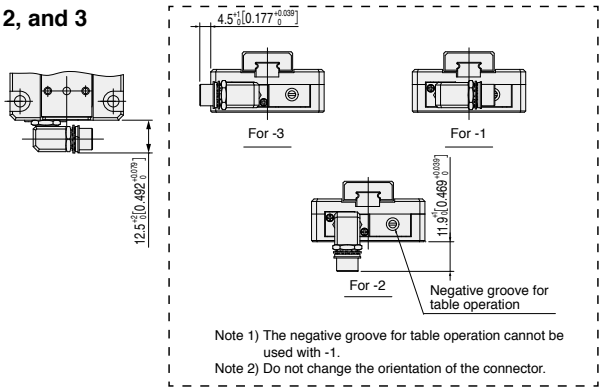

EW2H28

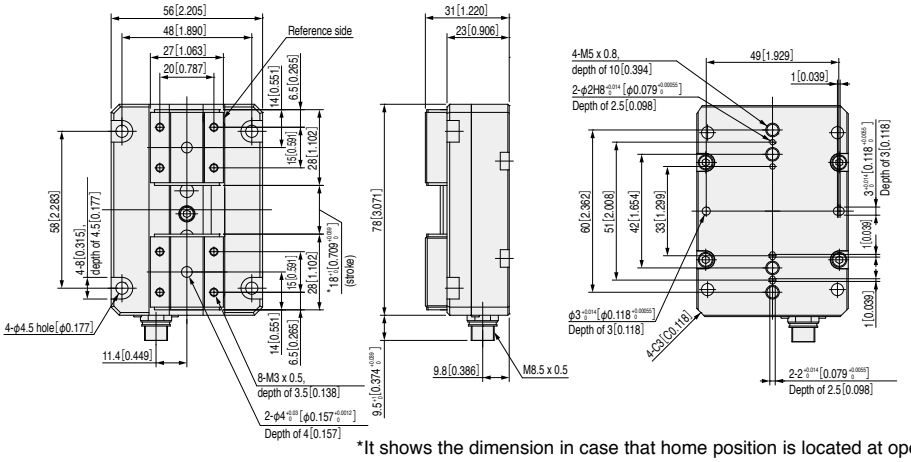

*It shows the dimension in case that home position is located at open-side. If you need the adjustment of home position, please change the parameter of home position shift.

Cable direction: for 1, 2, and 3

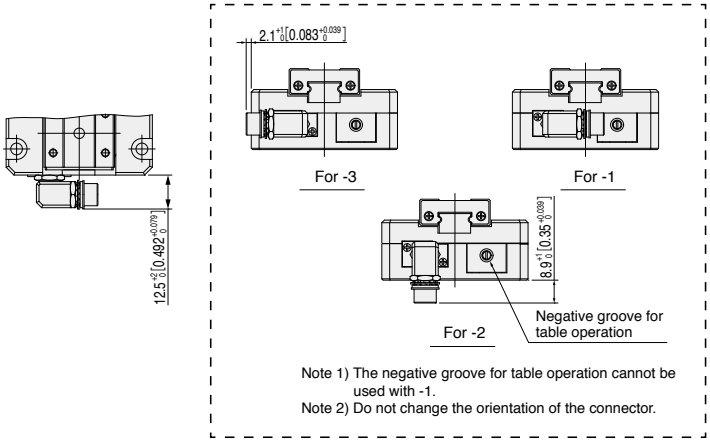

Note 1) The negative groove for table operation cannot be used with -1.
Note 2) Do not change the orientation of the connector.

●Relay cable mount dimensions/Bent cable dimensions (reference)

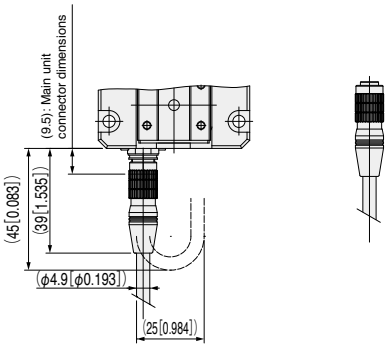

Note: The cable orientation does not matter. The dimensions of the connector when the relay cable is installed increases the length by approximately 30 mm.

EW2HL8

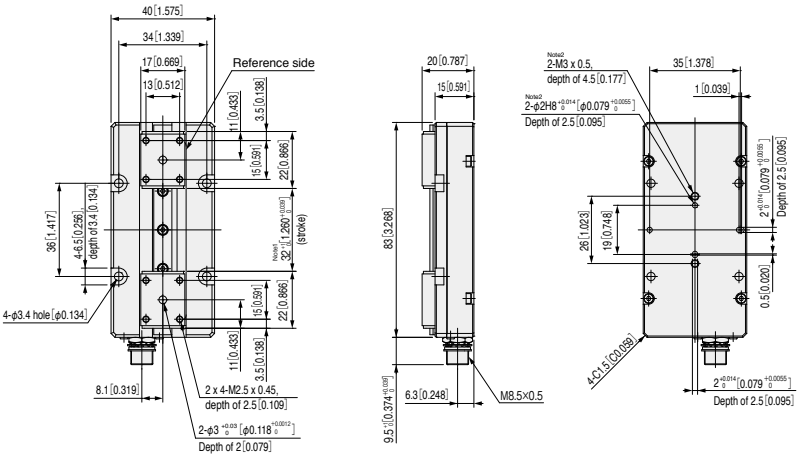

Note 1 *It shows the dimension in case that home position is located at open-side. If you need the adjustment of home position, please change the parameter of home position shift.

Note 2 Direct mounting is possible with our auto hand changer MJB34T.

ケーブル方向：1,2,3の場合

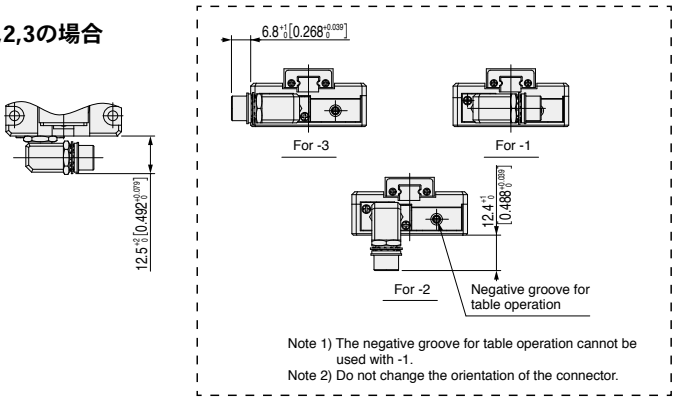

EW2HL18

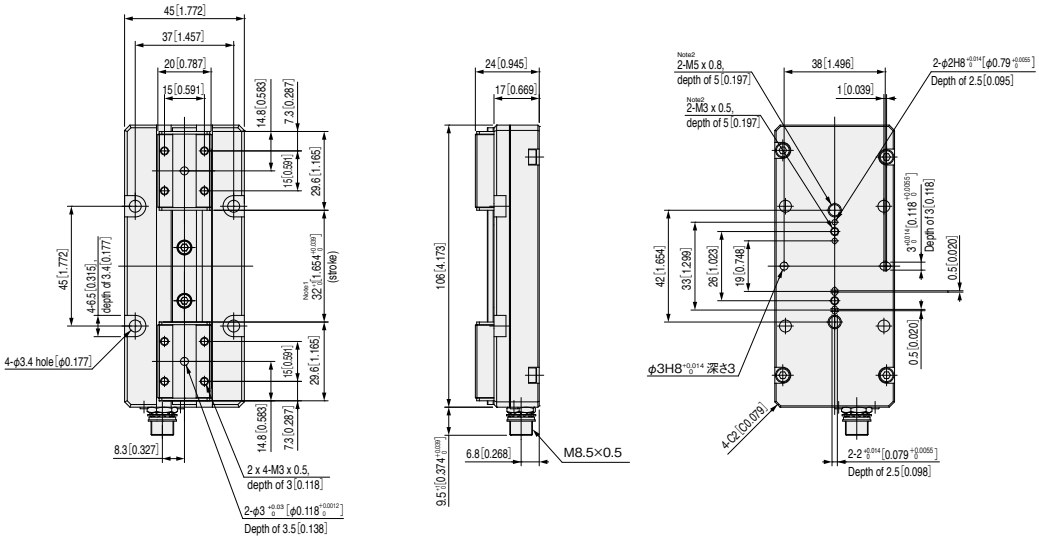

Note1 *It shows the dimension in case that home position is located at open-side. If you need the adjustment of home position, please change the parameter of home position shift.

※ 2 Direct mounting is possible with our auto hand changers MJB34T and MJB54T.

ケーブル方向：1,2,3の場合

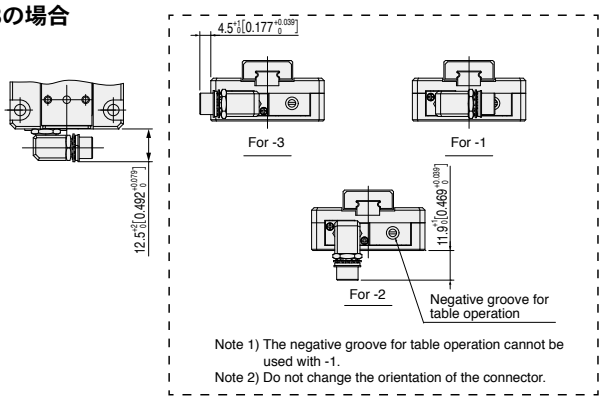

EW2HL28

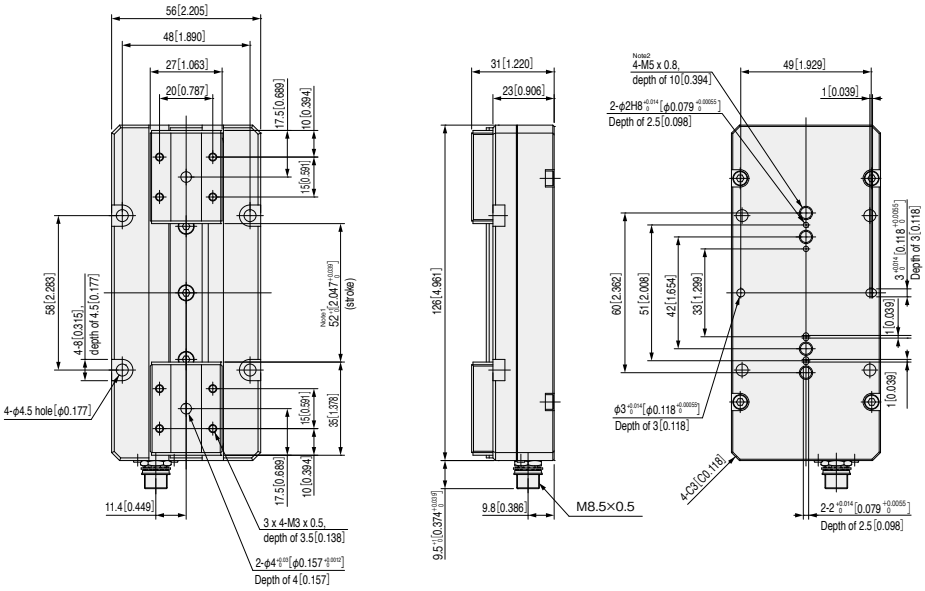

※ 1 It shows the dimension in case that home position is located at open-side. If you need the adjustment of home position, please change the parameter of home position shift.

※ 2 Direct mounting is possible with our auto hand changers MJB54T and MJB70T.

ケーブル方向：1,2,3の場合

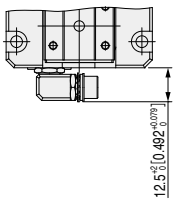

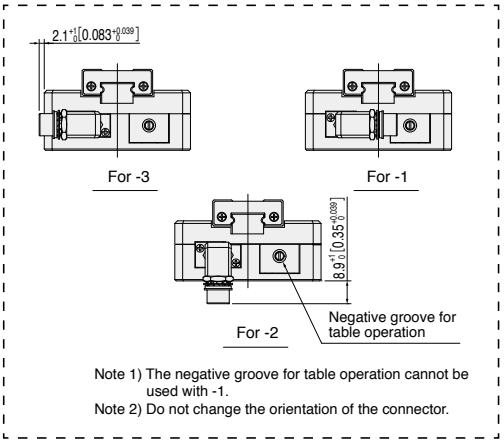

Note 1) The negative groove for table operation cannot be used with -1.
Note 2) Do not change the orientation of the connector.

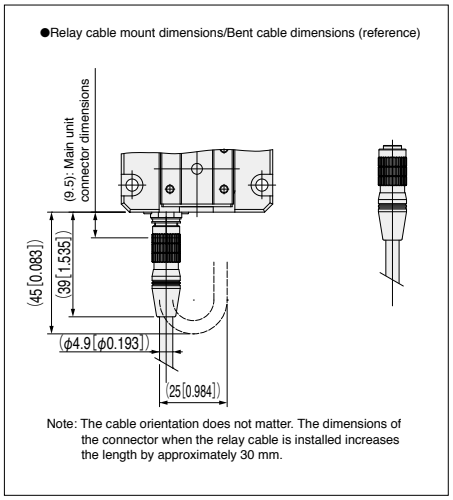

Controller

(point input controller)

EW2C-H- □ - □

DIN rail mounting plate
Blank：without
DP：with DIN rail mounting plate

Controller type
NP：Point input type（NPN specification）
PN：Point input type（PNP specification）

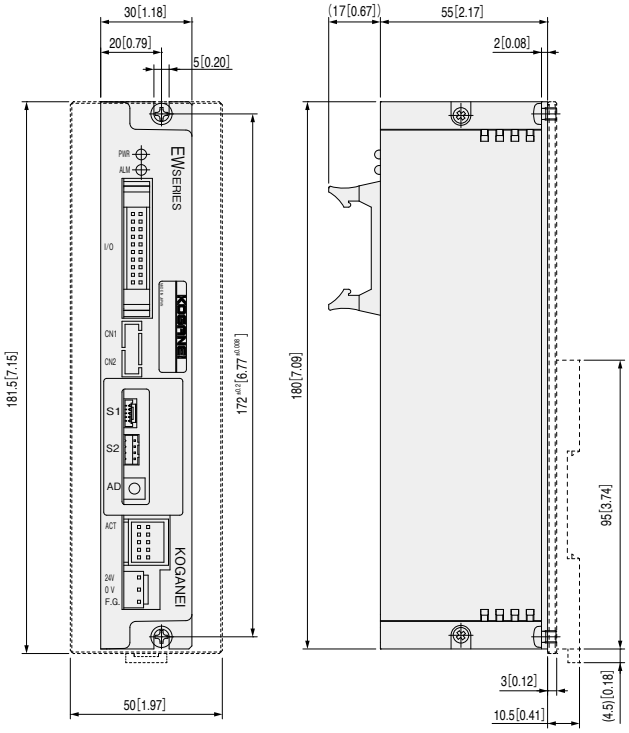

※ Broken line shows the dimension of DIN rail mounting plate.

(CC-Link controller)

EW2C-H-CC- □

DIN rail mounting plate
Blank：without
DP：with DIN rail mounting plate

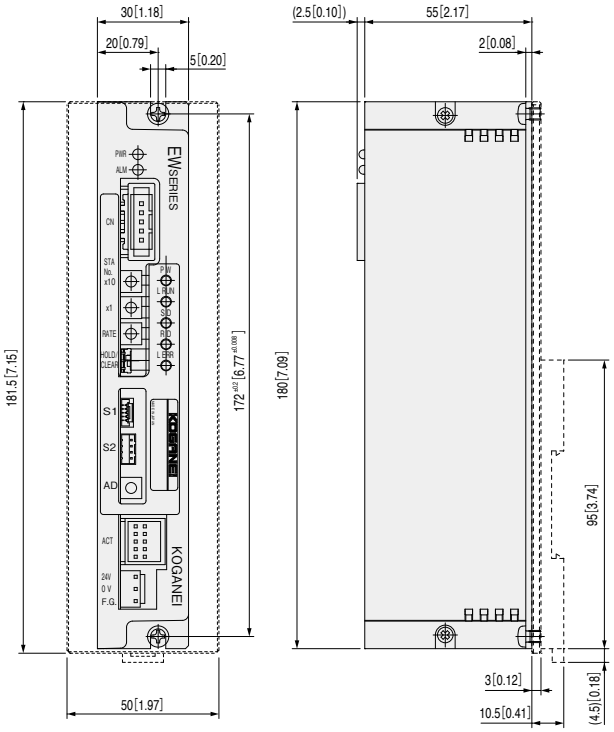

※ Broken line shows the dimension of DIN rail mounting plate.

(DIN rail mounting plate)

EW2DP

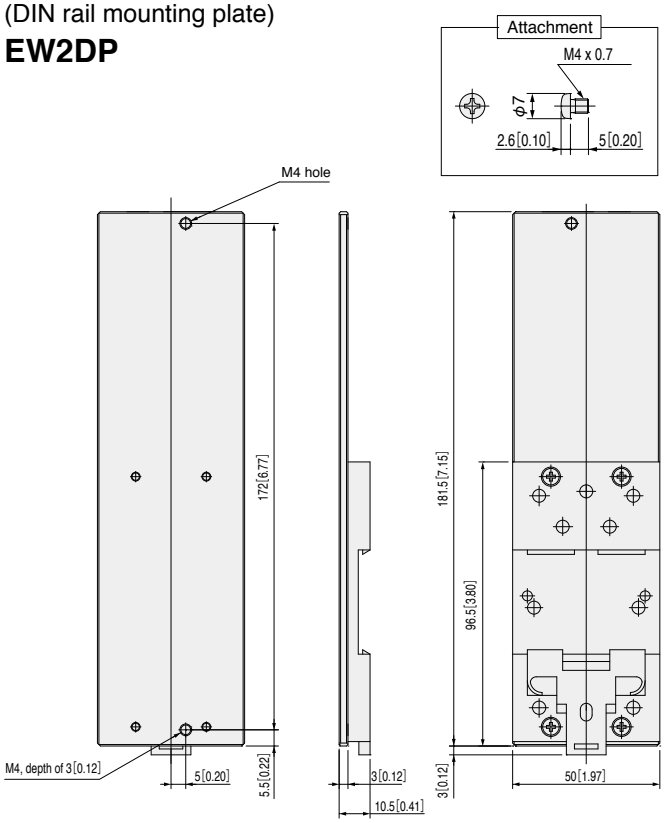

(CC-Link connector)

EW2CC

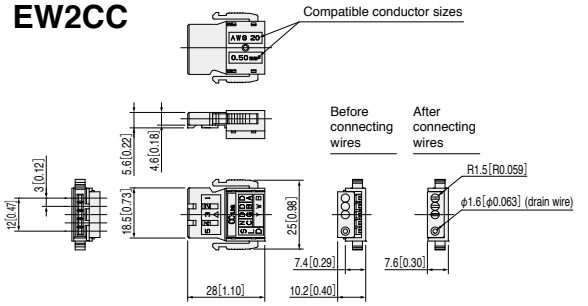

*This connector is compatible with CC-Link cables.

（Branch connector for CC-Link）

EW2CY

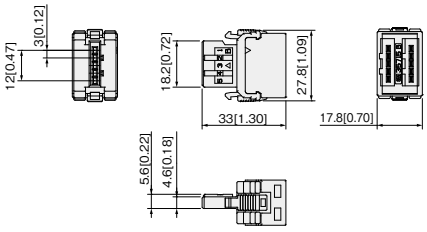

※ This connector is a CC-Link communication connector
It conforms to (Format: EW2CC).

Additional Parts

Main unit connector

NO.	Name	Color
1	U	Green
2	V	Brown
3	W	Yellow
4	Vcc	Orange
5	HU	White
6	HV	Red
7	HW	Black
8	GND	Blue

Cable shield

Controller connector

NO.	Name	Color
A1	U	Green
B1	V	Brown
A2	W	Yellow
B2	FG	White
A3	Vcc	Orange
B3	GND	Blue
A4	HU	White
B4	HV	Red
A5	HW	Black
B5	N.C.	-

· Relay

EW2KA-□
- 3L: 3 m [118 in]
- 5L: 5 m [197 in]

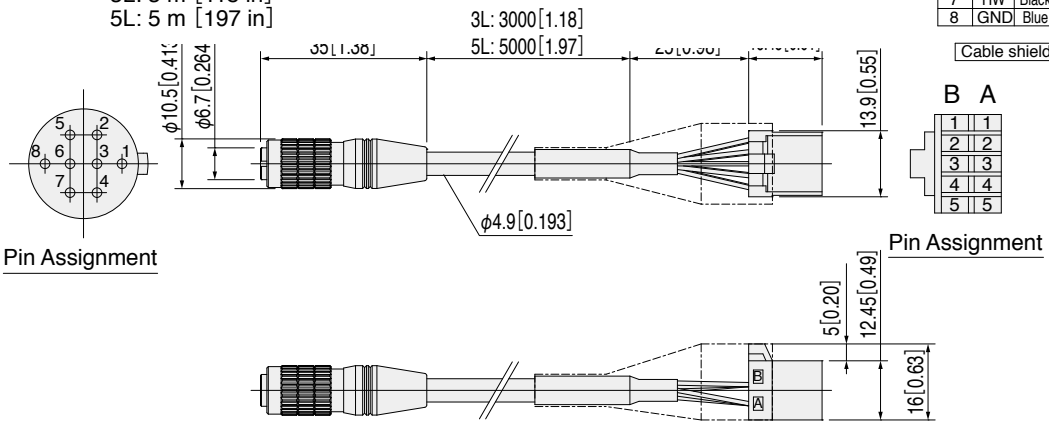

Pin Assignment

Pin Assignment

· Power

EW2KP

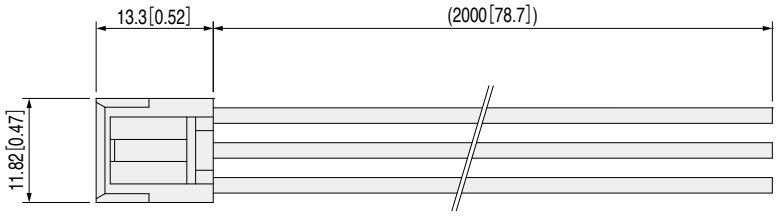

Power Connector Pin Assignment

NO.	Name	Color
1	24 V	Red
2	GND	Blue
3	F.G.	Green

Pin Assignment

· I/O

EW2KI

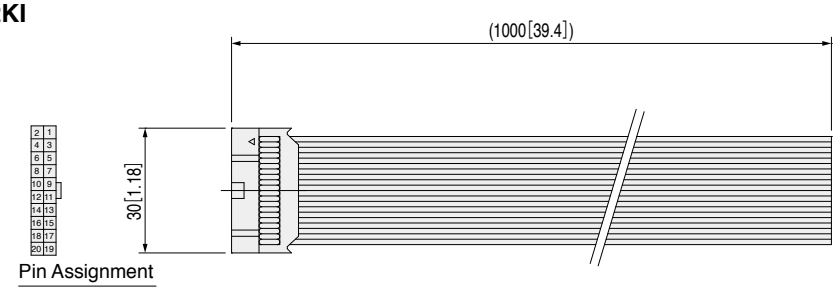

Pin Assignment

I/O Connector Pin Assignment

NO.	Name	Color
1	POS0	Brown
2	POS1	Red
3	POS2	Orange
4	POS3	Yellow
5	POS4	Green
6	START	Blue
7	STOP	Purple
8	ORG	Gray
9	RDY	White
10	BUSY	Black
11	INPOS	Brown
12	HOLD	Red
13	24G IN	Orange
14	N.C.	Yellow
15	24G	Green
16	24 V IN	Blue
17	N.C.	Purple
18	24 V	Gray
19	F.G.	White
20	F.G.	Black

· Daisy chain

EW2KD-□
- 008L: 80 mm[3.1 in]
- 1L: 1 m[39.4 in]
- 3L: 3 m[118 in]

Cable Wiring Table

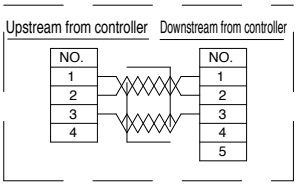

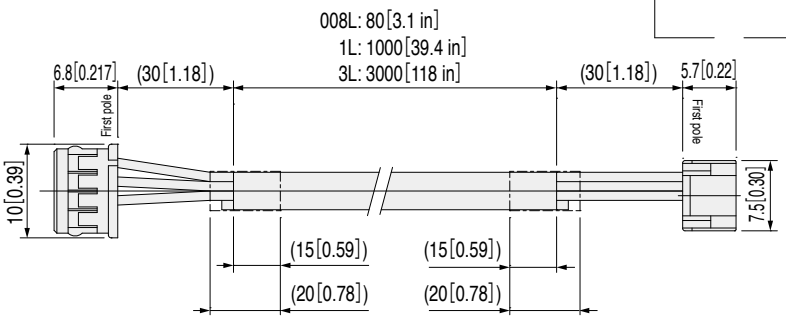

Connector Pin Assignment (Upstream from controller)

NO.	Name	Color
1	A	Brown
2	B	Blue
3	GND	Black
4		

Connector Pin Assignment (Downstream from controller)

NO.	Name	Color
1	A	Brown
2	B	Blue
3	GND	Black
4		
5		

· Communication

EW2KN-□
1L: 1 m [39.4 in]
3L: 3 m [118 in]

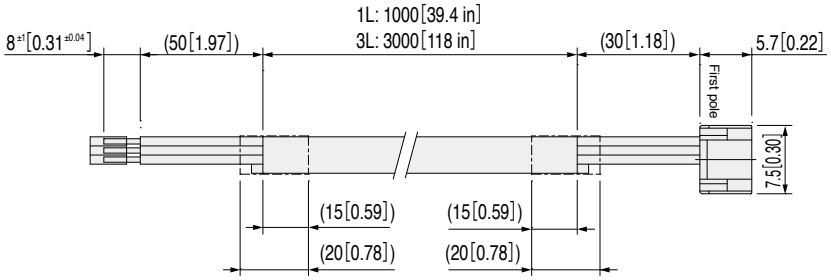

· Terminating resistor

EW2FR

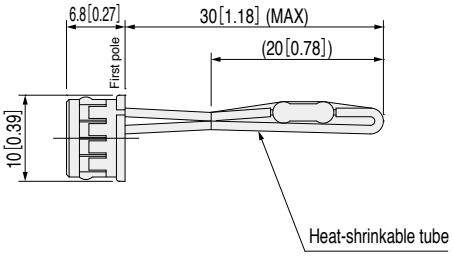

· Main unit relay (stranded wire)*

EW2KBA-□
015L: 150 mm [5.91 in]
025L: 250 mm [9.84 in]

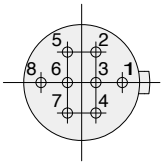

Pin Assignment

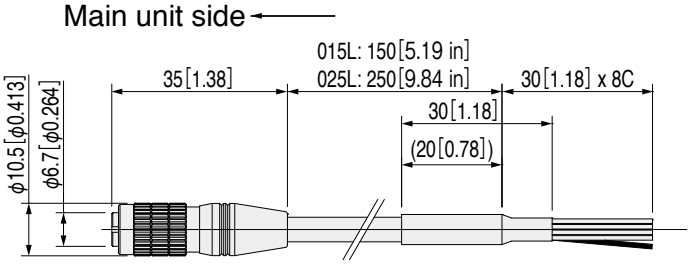

Main unit connector

NO.	Name	Color
1	U	Green
2	V	Brown
3	W	Yellow
4	Vcc	Orange
5	HU	White
6	HV	Red
7	HW	Black
8	GND	Blue

Cable shield

Cable Wiring Table

· Controller relay (stranded wire)*

EW2KBB-□
3L: 3 m
5L: 5 m

A B

1	1
2	2
3	3
4	4
5	5

Pin Assignment

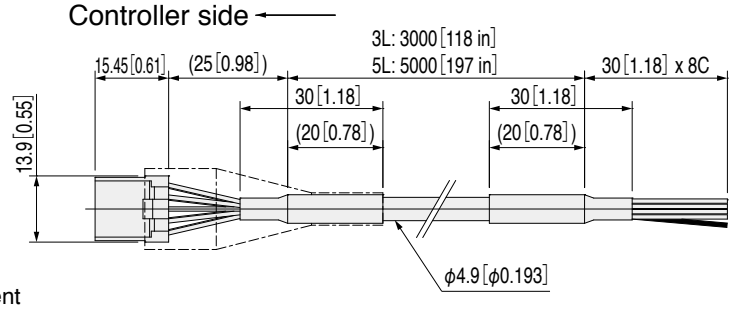

Controller connector

NO.	Name	Color
A1	U	Green
B1	V	Brown
A2	W	Yellow
B2	FG	Shield
A3	Vcc	Orange
B3	GND	Blue
A4	HU	White
B4	HV	Red
A5	HW	Black
B5	N.C.	-

Cable shield

Cable Wiring Table

*MJB Auto Hand Changer wiring

· CC-Link connector

EW2CC

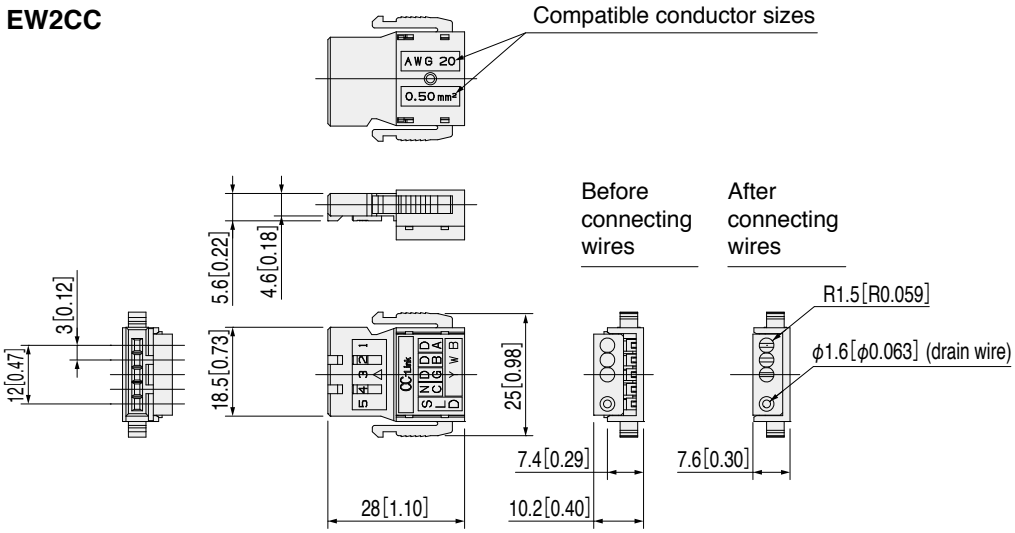

・Locating dowel pin

EW2P - □

Size

3 : ϕ3 (For EW2□8,EW2□18)

4 : ϕ4 (For EW2□28)

EW2P-3

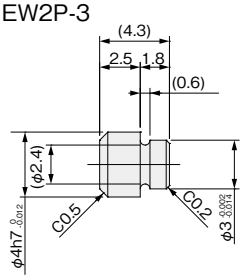

EW2P-4

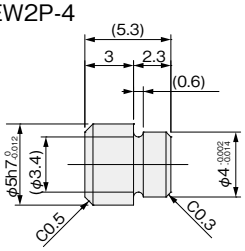

・Adapter

EW2A-H-□

Size (gripping force)

8 : 8 N (CPL□34□) [1.8 lbf]

18 : 18 N (CPL□54□) [4.0 lbf]

28 : 28 N (CPL□70□) [6.3 lbf]

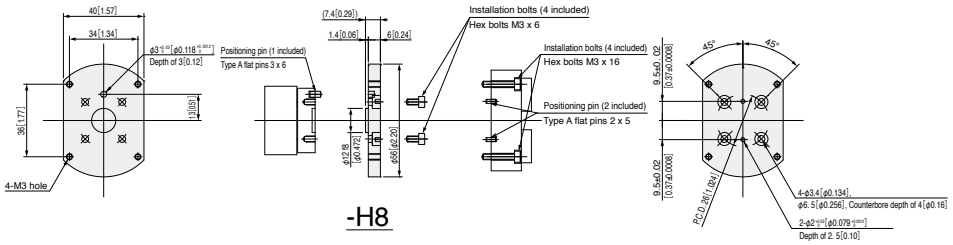

-H8

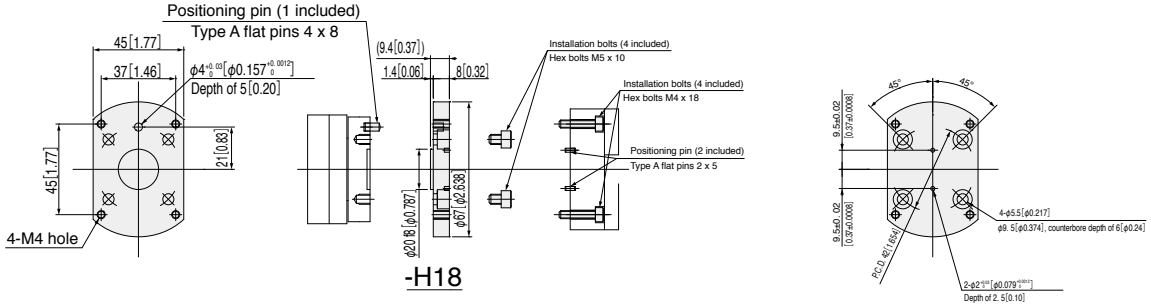

-H18

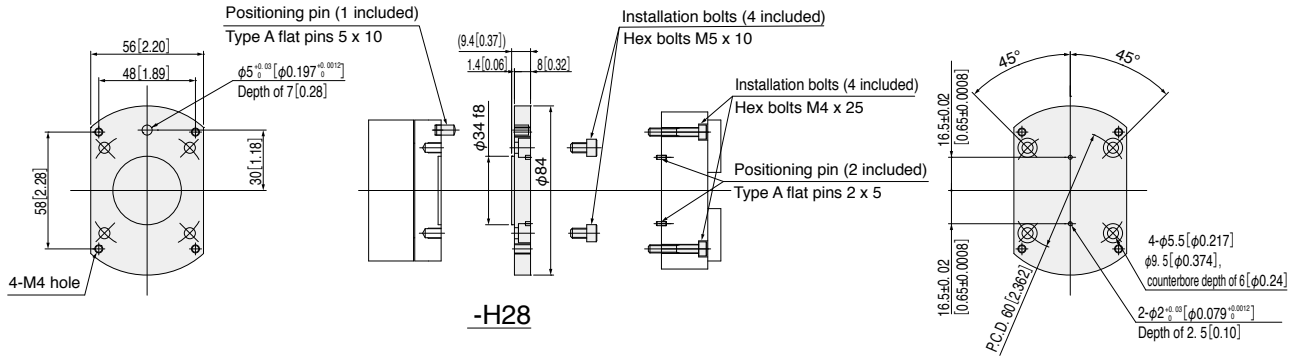

-H28

Tightening torque

● Workpiece installation

Used bolt	Maximum tightening torque (**N・m**)
M3 × 0.5	0.63
M4 × 0.5	1.5
M5 × 0.8	3

Technical Data

Limits on Gripping Force at Grip Points

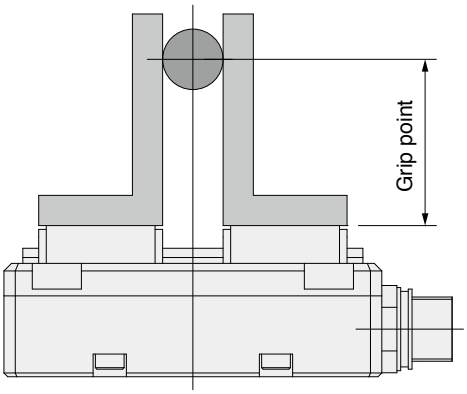

●Grip point and gripping force graph

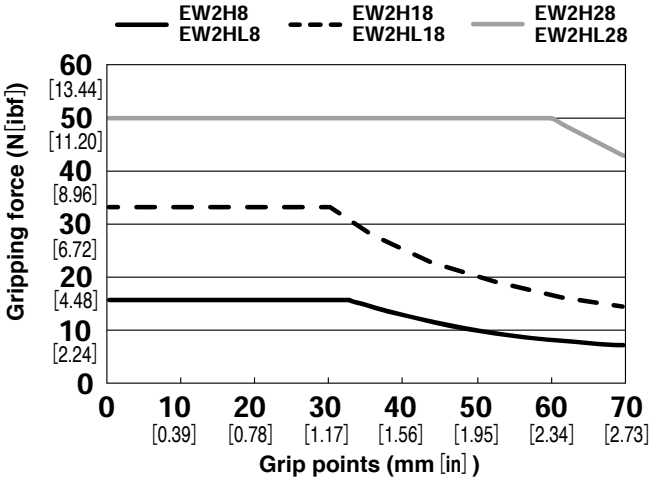

*This graph represents the maximum gripping force used for each size corresponding to grip points. Set grip points so that gripping force is not more than the allowed moment of inertia (Mp).

Load Capacity and Allowed Moment of Inertia

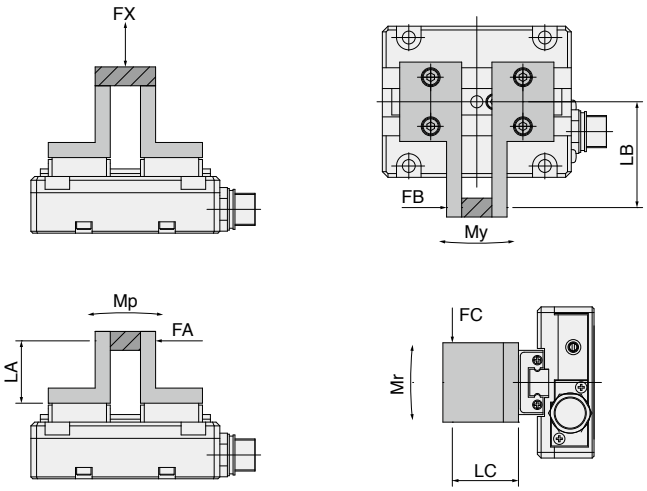

●Mp = FA x LA (N·m) [lbf·in]
●My = FB x LB (N·m) [lbf·in]
●Mr = FC x LC (N·m) [lbf·in]

[Smart Model]

Load and moment of inertia / Model	FX N [lbf]	Mp N·m[lbf·in]	My N·m[lbf·in]	Mr N·m[lbf·in]
EW2H□8	40 [9.0]	0.51 [4.51]	0.3 [2.65]	0.6 [5.30]
EW2H□18	120 [27.0]	1.0 [8.84]	1.0 [8.84]	2.0 [17.68]
EW2H□28	190 [42.7]	3.0 [26.51]	4.0 [35.35]	8.0 [70.70]

Gripping Force Specifications

EW2H8
EW2HL8

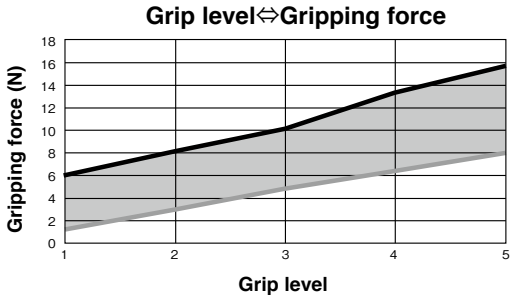

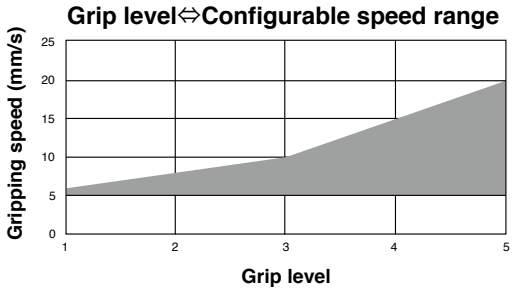

EW2H18
EW2HL18

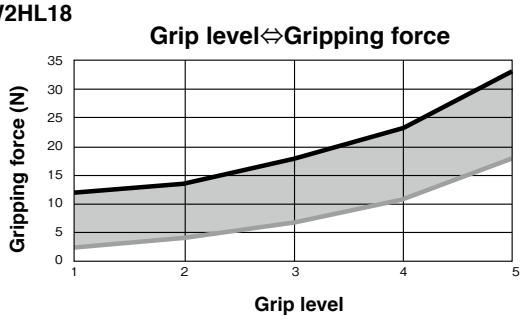

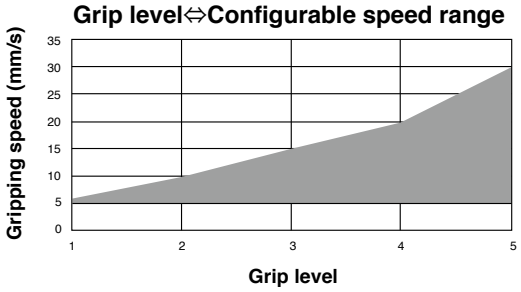

EW2H28
EW2HL28

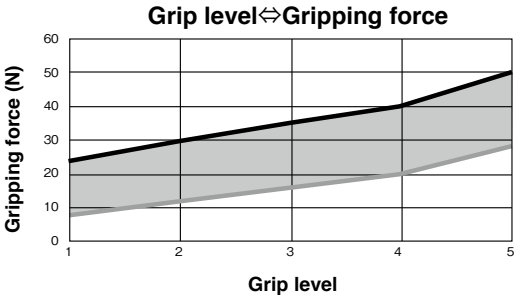

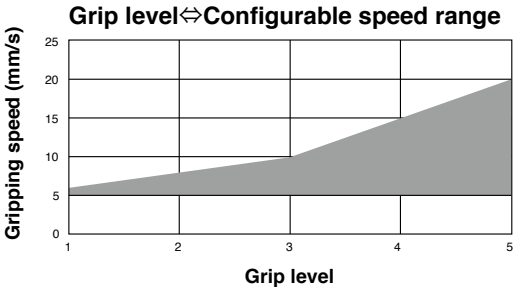

Force is generated with in the range shown in the above graph according to the grip level.
The speed range that can be set changes according to the grip level.
*These gripping state graphs are approximations.

KOGANEI
International America, Inc.

48860 Milmont Drive Suite 108C
Fremont, CA 94538
TEL: 1-855-KOGANEI (564 2634)
FAX: 510-744-1676
MAIL: sales@koganeiusa.com
Web: www.koganeiusa.com